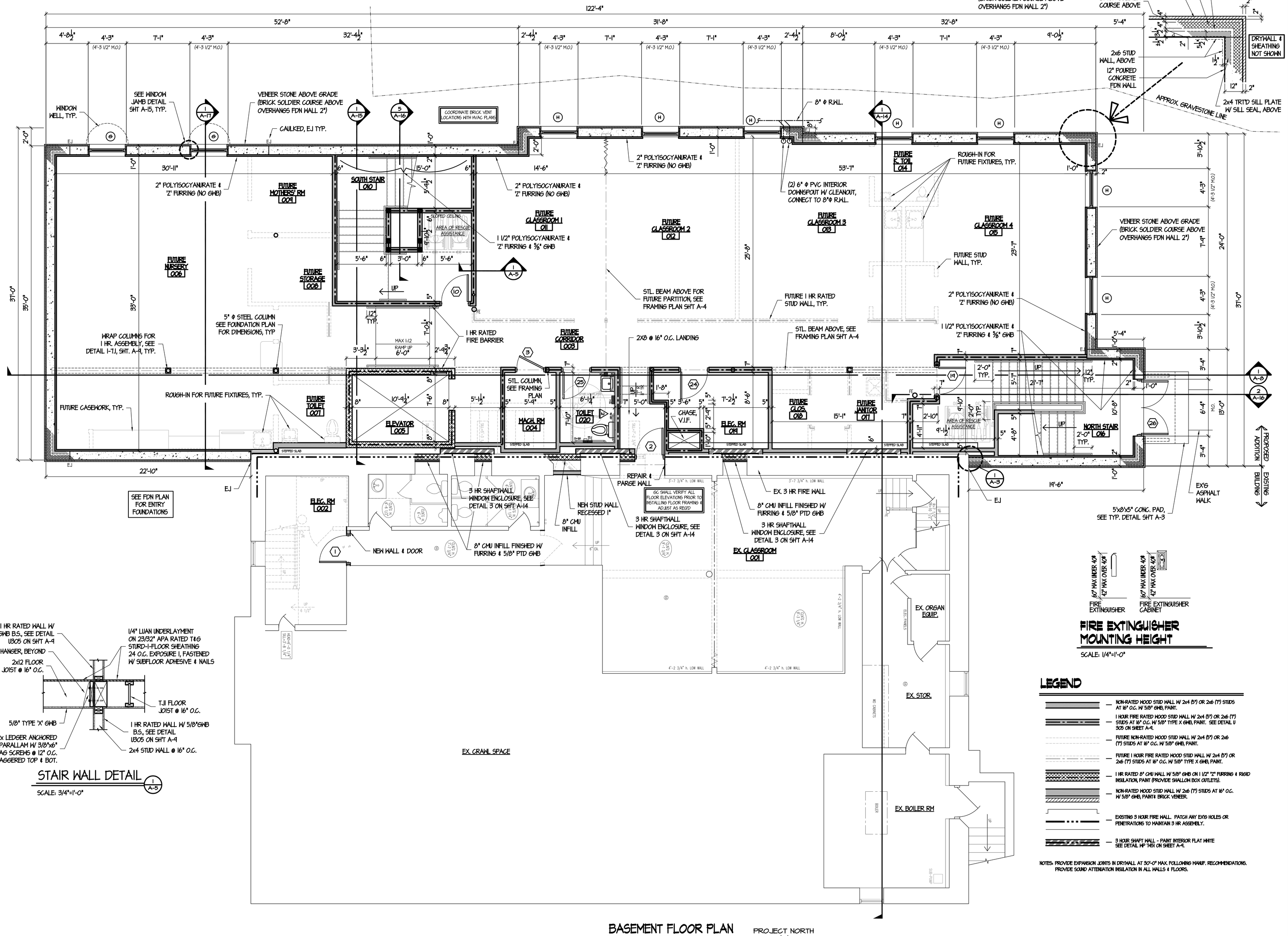

BASEMENT FLOOR PLAN

SCALE: 1/4"=1'-0"

PROJECT NORTH

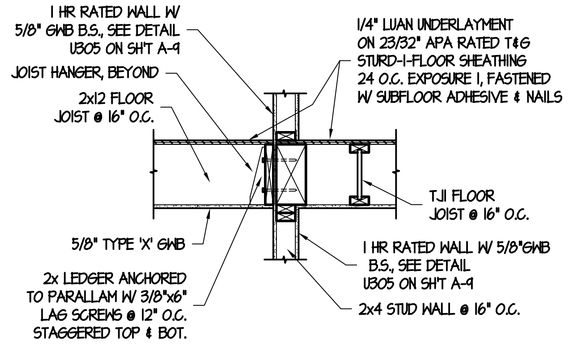

STAIR WALL DETAIL

SCALE: 3/4"=1'-0"

FIRE EXTINGUISHER MOUNTING HEIGHT

SCALE: 1/4"=1'-0"

LEGEND

- NON-RATED WOOD STUD WALL W/ 2x4 (5") OR 2x6 (7") STUDS AT 16" O.C. W/ 5/8" GWB, PAINT.
- 1 HOUR FIRE RATED WOOD STUD WALL W/ 2x4 (5") OR 2x6 (7") STUDS AT 16" O.C. W/ 5/8" TYPE X GWB, PAINT. SEE DETAIL U 305 ON SHEET A-9.
- FUTURE NON-RATED WOOD STUD WALL W/ 2x4 (5") OR 2x6 (7") STUDS AT 16" O.C. W/ 5/8" GWB, PAINT.
- FUTURE 1 HOUR FIRE RATED WOOD STUD WALL W/ 2x4 (5") OR 2x6 (7") STUDS AT 16" O.C. W/ 5/8" TYPE X GWB, PAINT.
- 1 HR RATED 8" CMU WALL W/ 5/8" GWB ON 1 1/2" "Z" FURRING & RIGID INSULATION, PAINT (PROVIDE SHALLOW BOX OUTLETS).
- NON-RATED WOOD STUD WALL W/ 2x6 (7") STUDS AT 16" O.C. W/ 5/8" GWB, PAINT& BRICK VENEER.
- EXISTING 3 HOUR FIRE WALL. PATCH ANY EX'G HOLES OR PENETRATIONS TO MAINTAIN 3 HR ASSEMBLY.
- 3 HOUR SHAFT WALL - PAINT INTERIOR FLAT WHITE SEE DETAIL HP 7451 ON SHEET A-9.

NOTES: PROVIDE EXPANSION JOINTS IN DRYWALL AT 30'-0" MAX. FOLLOWING MANUF. RECOMMENDATIONS. PROVIDE SOUND ATTENUATION INSULATION IN ALL WALLS & FLOORS.

SEAL:

DRAWN BY:	B. KC, EP
REVISION:	
REVISION:	4
RE-BID	AUGUST 11, 2006
CONSTRUCTION DWG.	MAY 19, 2006
PRELIMINARY DWG.	JANUARY 11, 2006
CONCEPTUAL DWG.	DECEMBER 22, 2005
EXISTING CONDITIONS	JULY 20, 2004

WATKINS ARCHITECT LTD.
P.O. BOX 412 FLEETWOOD PA. 19522
PH. NO.: 610-944-5536 FAX: 610-944-5539

COPYRIGHT 2006 WATKINS ARCHITECT LTD

PROPOSED ADDITION AND RENOVATIONS FOR:

ZION'S UNION CHURCH MAXATAWNY

CHURCH ROAD, MAXATAWNY TOWNSHIP, BERKS COUNTY, PA.

ISSUE DATE: AUG. 11, 2006

SCALE: AS NOTED

PROJ. NO.: 07-20-04-01

SHEET NO.: RE-BID A-5

IT IS THE CONTRACTORS RESPONSIBILITY TO VERIFY ALL DIMENSIONS AND CONDITIONS BEFORE PROCEEDING WITH ANY PARTS OF THE WORK OR ORDERING OF MATERIALS. IF THE CONTRACTOR ENCOUNTERS ANY QUESTIONABLE CONDITIONS, THE CONTRACTOR SHALL NOTIFY THE ARCHITECT OF ANY VARIANCES FROM THE PROPOSED DESIGN.

P:\1 Project\Zion's Church Maxatawny\CD\RE-BID 7-8-06\A-5 RE-BID Basement Plan 7-8-06.dwg, 8/14/2006 7:57:32 AM